Work Order ID 60524

Tuesday, July 13, 2010 11:28:11 AM

Item ID: D212-664-201 **Accept** **Setup Start**

Revision ID: **Stop**

Item Name: Crosstube Aft

Start Date: 7/13/2010 **Start Qty:** 1.00 **Cust Item ID:**

Required Date: 7/26/2010 **Req'd Qty:** 1.00 **Customer:**

Reference:

Run Start

Approvals: **Process Plan:** _____ **Date:** _____ **Tooling:** _____ **Date:** _____

Stop

QC: _____ **Date:** _____ **SPC (Y/N):** _____ **Date:** _____

Sequence ID/ Work Center ID	Operation Description	Set Up/ Run Hours	Tool ID	Tool #	Plan Code	Accept Qty	Reject Qty	Reject Number	Insp. Stamp
Draw Nbr	**Revision Nbr**								
D212-664-241	Rev D								
100	DOCUMENT CONTROL	0.00							
DC	**Memo**	0.00							
Document Control	Photocopy bluefile and create labels as per PPP D212-664-201		CHG003						
110	Pick Kit	0.00							
Packaging	Packaging								
Packaging	**Memo**	0.00							
120	BENDING MACHINE - CROSSTUBES	0.00							
CNC Bend 2	**Memo**	0.00							
CNC Alpha 160 Bender	Bend tube as per Dwg D212-664-241 using CNC bender program 212-aft								

B60524

Dart Aerospace Ltd

W/O:		WORK ORDER CHANGES					
DATE	STEP	PROCEDURE CHANGE	By	Date	Qty	Approval Chief Eng / Prod Mgr	Approval QC Inspector

Part No: _____ **PAR #:** _____ **Fault Category:** _____ **NCR:** Yes No **DQA:** _____ **Date:** _____

Resolution: _____ **Disposition:** _____ **QA: N/C Closed:** _____ **Date:** _____

NCR:		WORK ORDER NON-CONFORMANCE (NCR)						
DATE	STEP	Description of NC Section A	Corrective Action Section B			Verification Section C	Approval Chief Eng	Approval QC Inspector
			Initial Chief Eng	Action Description Chief Eng	Sign & Date			

NOTE: Date & initial all entries

H:\fFORMS\Quality Assurance\approved QA\NCRWO RevE

Work Order ID 60524

Tuesday, July 13, 2010 11:28:11 AM

Item ID: D212-664-201 **Accept** **Setup Start**

Revision ID: **Stop**

Item Name: Crosstube Aft

Start Date: 7/13/2010 **Start Qty:** 1.00 **Cust Item ID:**

Required Date: 7/26/2010 **Req'd Qty:** 1.00 **Customer:**

Reference:

Approvals: **Process Plan:** _____ **Date:** _____ **Tooling:** _____ **Date:** _____ **Run Start**

QC: _____ **Date:** _____ **SPC (Y/N):** _____ **Date:** _____ **Stop**

Sequence ID/ Work Center ID	Operation Description	Set Up/ Run Hours	Tool ID	Tool #	Plan Code	Accept Qty	Reject Qty	Reject Number	Insp. Stamp
130	QC15- Crosstube Dimensional Check	0.00							
QC	**Memo**	0.00							
Quality Control									
140		0.00							
Crosstubes	Crosstubes								
Crosstubes	**Memo**	0.00							

1-Drill pilot holes in tube as per Dwg D212-664-241 using drill Jig DT8550, DT8551, drill table DT8577 and locate tower holes #8 as per QSI0010.

2-Ream hole to finish size in tube as per Dwg D212-664-241using drill Jig DT8550 & DT8551.Check dimensions between holes, both sides on both cuffs, to ensure alignment with saddle holes.

3-Scribe part # and batch # using vibrating stylus as per Dwg D212-664-241

4-Deburr & Inspect for surface damage. Repair damage within limits as per Dwg D212-664-241

10/08/25

10-8-25

10-8-26

Dart Aerospace Ltd

W/O:		WORK ORDER CHANGES					
DATE	STEP	PROCEDURE CHANGE	By	Date	Qty	Approval Chief Eng / Prod Mgr	Approval QC Inspector

Part No: _____ **PAR #:** _____ **Fault Category:** _____ **NCR:** Yes No **DQA:** _____ **Date:** _____

Resolution: _____ **Disposition:** _____ **QA: N/C Closed:** _____ **Date:** _____

NCR:		WORK ORDER NON-CONFORMANCE (NCR)						
DATE	STEP	Description of NC Section A	Corrective Action Section B			Verification Section C	Approval Chief Eng	Approval QC Inspector
			Initial Chief Eng	Action Description Chief Eng	Sign & Date			

NOTE: Date & initial all entries

H:\fFORMS\Quality Assurance\approved QA\NCRWO RevE

Work Order ID 60524

Tuesday, July 13, 2010 11:28:11 AM

Item ID: D212-664-201 **Accept** **Setup Start** **Stop**

Revision ID:

Item Name: Crosstube Aft

Start Date: 7/13/2010 **Start Qty:** 1.00 **Cust Item ID:**

Required Date: 7/26/2010 **Req'd Qty:** 1.00 **Customer:**

Reference:

Run Start **Stop**

Approvals: **Process Plan:** _____ **Date:** _____ **Tooling:** _____ **Date:** _____

QC: _____ **Date:** _____ **SPC (Y/N):** _____ **Date:** _____

Sequence ID/ Work Center ID	Operation Description	Set Up/ Run Hours	Tool ID	Tool #	Plan Code	Accept Qty	Reject Qty	Reject Number	Insp. Stamp
150	Crosstubes Chemical Conversion	0.00							
HandFXtube	**Memo**	0.00							
Hand Finishing Crosstubes	Chemical Conversion Coat as within 24 hours of bending and drilling		DP		10-8-26				
160	QC3- Inspect Part Finish	0.00							
QC	**Memo**	0.00	8 10/08/26						
Quality Control									
170	QC5- Inspect part completeness to step on W/O	0.00							
QC	**Memo**	0.00	8 10/08/26						
Quality Control									

Dart Aerospace Ltd

W/O:		WORK ORDER CHANGES					
DATE	STEP	PROCEDURE CHANGE	By	Date	Qty	Approval Chief Eng / Prod Mgr	Approval QC Inspector

Part No: _____ **PAR #:** _____ **Fault Category:** _____ **NCR:** Yes No **DQA:** _____ **Date:** _____

Resolution: _____ **Disposition:** _____ **QA: N/C Closed:** _____ **Date:** _____

NCR:		WORK ORDER NON-CONFORMANCE (NCR)						
DATE	STEP	Description of NC Section A	Corrective Action Section B			Verification Section C	Approval Chief Eng	Approval QC Inspector
			Initial Chief Eng	Action Description Chief Eng	Sign & Date			

NOTE: Date & initial all entries

H:\fFORMS\Quality Assurance\approved QA\NCRWO RevE

Work Order ID 60524

Tuesday, July 13, 2010 11:28:11 AM

Item ID: D212-664-201 **Accept** **Setup Start**

Revision ID: **Stop**

Item Name: Crosstube Aft

Start Date: 7/13/2010 **Start Qty:** 1.00 **Cust Item ID:**

Required Date: 7/26/2010 **Req'd Qty:** 1.00 **Customer:**

Reference:

Approvals: **Process Plan:** _____ **Date:** _____ **Tooling:** _____ **Date:** _____ **Run Start**

QC: _____ **Date:** _____ **SPC (Y/N):** _____ **Date:** _____ **Stop**

Sequence ID/ Work Center ID	Operation Description	Set Up/ Run Hours	Tool ID	Tool #	Plan Code	Accept Qty	Reject Qty	Reject Number	Insp. Stamp
180	Outsource process - NDT per QSI038 4.1	0.00				CZ	10/8/27		①
Outsource2	**Memo**	0.00							
Outsource process - NDT	Liquid Penetrant Inspection as per QSI 038 Issue P/O: 12463 LPI as per ASTM 1417 Level 2 Attach copy of NDT results to work order								
190	Receive & Inspect for Damage & Mat'l Certs Packaging	0.00					10/8/27		(1)
Packaging	**Memo**	0.00							
Packaging	Ensure copy of NDT results attached to work order.								
200	QC5- Inspect part completeness to step on W/O	0.00				RT	10-08-31		
QC	**Memo**	0.00							
Quality Control	Inspect for damage & ensure results are as per Dwg D212-664-241								

Dart Aerospace Ltd

W/O:		WORK ORDER CHANGES					
DATE	STEP	PROCEDURE CHANGE	By	Date	Qty	Approval Chief Eng / Prod Mgr	Approval QC Inspector

Part No: _____ **PAR #:** _____ **Fault Category:** _____ **NCR:** Yes No **DQA:** _____ **Date:** _____

Resolution: _____ **Disposition:** _____ **QA: N/C Closed:** _____ **Date:** _____

NCR:		WORK ORDER NON-CONFORMANCE (NCR)						
DATE	STEP	Description of NC Section A	Corrective Action Section B			Verification Section C	Approval Chief Eng	Approval QC Inspector
			Initial Chief Eng	Action Description Chief Eng	Sign & Date			

NOTE: Date & initial all entries

H:\fFORMS\Quality Assurance\approved QA\NCRWO RevE

Work Order ID 60524

Tuesday, July 13, 2010 11:28:11 AM

Item ID: D212-664-201 **Accept** **Setup Start** **Stop**

Revision ID:

Item Name: Crosstube Aft

Start Date: 7/13/2010 **Start Qty:** 1.00 **Cust Item ID:**

Required Date: 7/26/2010 **Req'd Qty:** 1.00 **Customer:**

Reference:

Approvals: **Process Plan:** _____ **Date:** _____ **Tooling:** _____ **Date:** _____ **Run Start** **Stop**

QC: _____ **Date:** _____ **SPC (Y/N):** _____ **Date:** _____

Sequence ID/ Work Center ID	Operation Description	Set Up/ Run Hours	Tool ID	Tool #	Plan Code	Accept Qty	Reject Qty	Reject Number	Insp. Stamp
210 SprayPaint Spray Painting	Spray Painting per QSI005 4.2 SprayPaint	0.00				EL	10	08	31
	Memo 1-Prime inside and outside crosstube as per QSI 005 4.2 2-Paint outside crosstube with White Imron as per QSI 005 4.2 PRIME: Start Time: 8:00 Fininsh Time: 10:00 PAINT: Start Time: 2:00 Finish Time: 3:00	0.00							
220 QC Quality Control	QC14- Inspect Spray Paint	0.00				MM	10	09	01 (1)
	Memo Then,Wrap in plastic bag to protect from scratches	0.00							

Dart Aerospace Ltd

W/O:		WORK ORDER CHANGES					
DATE	STEP	PROCEDURE CHANGE	By	Date	Qty	Approval Chief Eng / Prod Mgr	Approval QC Inspector

Part No: _____ PAR #: _____ Fault Category: _____ NCR: Yes No DQA: _____ Date: _____

Resolution: _____ Disposition: _____ QA: N/C Closed: _____ Date: _____

NCR:		WORK ORDER NON-CONFORMANCE (NCR)						
DATE	STEP	Description of NC Section A	Corrective Action Section B			Verification Section C	Approval Chief Eng	Approval QC Inspector
			Initial Chief Eng	Action Description Chief Eng	Sign & Date			

NOTE: Date & initial all entries

H:\fFORMS\Quality Assurance\approved QA\NCRWO RevE

Work Order ID 60524

Tuesday, July 13, 2010 11:28:11 AM

Item ID: D212-664-201 **Accept** **Setup Start**

Revision ID: **Stop**

Item Name: Crosstube Aft

Start Date: 7/13/2010 **Start Qty:** 1.00 **Cust Item ID:**

Required Date: 7/26/2010 **Req'd Qty:** 1.00 **Customer:**

Reference:

Approvals: **Process Plan:** _____ **Date:** _____ **Tooling:** _____ **Date:** _____ **Run Start**

QC: _____ **Date:** _____ **SPC (Y/N):** _____ **Date:** _____ **Stop**

Sequence ID/ Work Center ID	Operation Description	Set Up/ Run Hours	Tool ID	Tool #	Plan Code	Accept Qty	Reject Qty	Reject Number	Insp. Stamp
230	Crosstubes	0.00				ml	10	09	07 (1)
Crosstubes									
Crosstubes	**Memo**	0.00							

1- Lightly scuff the bonded area using a 320 grit sand paper and clean the area with 41058 wash 'n' wipe

2-Install supports with magnobond as per QSI 015 Adhere for for 12 Hrs
A/R 6398 Magnobond Batch: 114158
Expiry Date: 01/2011

3-Install clamps as per Dwg D212-664-241. Torque clamps to 80-100 in lb. ml 10.09.08 (1)

240	QC5- Inspect part completeness to step on W/O	0.00							
QC	**Memo**	0.00							
Quality Control									

S 10/08/08

Dart Aerospace Ltd

W/O:		WORK ORDER CHANGES					
DATE	STEP	PROCEDURE CHANGE	By	Date	Qty	Approval Chief Eng / Prod Mgr	Approval QC Inspector

Part No: _____ **PAR #:** _____ **Fault Category:** _____ **NCR:** Yes No **DQA:** _____ **Date:** _____

Resolution: _____ **Disposition:** _____ **QA: N/C Closed:** _____ **Date:** _____

NCR:		WORK ORDER NON-CONFORMANCE (NCR)						
DATE	STEP	Description of NC Section A	Corrective Action Section B			Verification Section C	Approval Chief Eng	Approval QC Inspector
			Initial Chief Eng	Action Description Chief Eng	Sign & Date			

NOTE: Date & initial all entries

H:\fFORMS\Quality Assurance\approved QA\NCRWO RevE

Work Order ID 60524

Tuesday, July 13, 2010 11:28:11 AM

Item ID: D212-664-201 **Accept** **Setup Start** **Stop**

Revision ID:

Item Name: Crosstube Aft

Start Date: 7/13/2010 **Start Qty:** 1.00 **Cust Item ID:**

Required Date: 7/26/2010 **Req'd Qty:** 1.00 **Customer:**

Reference:

Run Start **Stop**

Approvals: **Process Plan:** _____ **Date:** _____ **Tooling:** _____ **Date:** _____

QC: _____ **Date:** _____ **SPC (Y/N):** _____ **Date:** _____

Sequence ID/ Work Center ID	Operation Description	Set Up/ Run Hours	Tool ID	Tool #	Plan Code	Accept Qty	Reject Qty	Reject Number	Insp. Stamp
250	Pick Kit	0.00							
Packaging						7/10/09		0	
Packaging	**Memo**	0.00							
260	QC4- 100% Inspect kits for completeness	0.00							
QC		7/10/09							
Quality Control	**Memo**	0.00				40			
270		0.00							
Packaging	Packaging								
Packaging	**Memo**	0.00				7/10/09			
Packaging	Identify and pack for shipping as per PPP D212-664-201	Rev E							

Dart Aerospace Ltd

W/O:		WORK ORDER CHANGES					
DATE	STEP	PROCEDURE CHANGE	By	Date	Qty	Approval Chief Eng / Prod Mgr	Approval QC Inspector

Part No: _____ **PAR #:** _____ **Fault Category:** _____ **NCR:** Yes No **DQA:** _____ **Date:** _____

Resolution: _____ **Disposition:** _____ **QA: N/C Closed:** _____ **Date:** _____

NCR:		WORK ORDER NON-CONFORMANCE (NCR)						
DATE	STEP	Description of NC Section A	Corrective Action Section B			Verification Section C	Approval Chief Eng	Approval QC Inspector
			Initial Chief Eng	Action Description Chief Eng	Sign & Date			

NOTE: Date & initial all entries

H:\fFORMS\Quality Assurance\approved QA\NCRWO RevE

Work Order ID 60524

Tuesday, July 13, 2010 11:28:11 AM

Item ID: D212-664-201 **Accept** **Setup Start**

Revision ID: **Stop**

Item Name: Crosstube Aft

Start Date: 7/13/2010 **Start Qty:** 1.00 **Cust Item ID:**

Required Date: 7/26/2010 **Req'd Qty:** 1.00 **Customer:**

Reference:

Approvals: **Process Plan:** _____ **Date:** _____ **Tooling:** _____ **Date:** _____ **Run Start**

QC: _____ **Date:** _____ **SPC (Y/N):** _____ **Date:** _____ **Stop**

Sequence ID/ Work Center ID	Operation Description	Set Up/ Run Hours	Tool ID	Tool #	Plan Code	Accept Qty	Reject Qty	Reject Number	Insp. Stamp
280	QC21- Final Inspection - Work Order Release	0.00						10/09/09	
QC	Memo	0.00							
Quality Control									

M 10-9-09

Dart Aerospace Ltd

W/O:		WORK ORDER CHANGES					
DATE	STEP	PROCEDURE CHANGE	By	Date	Qty	Approval Chief Eng / Prod Mgr	Approval QC Inspector

Part No: _____ **PAR #:** _____ **Fault Category:** _____ **NCR:** Yes No **DQA:** _____ **Date:** _____

Resolution: _____ **Disposition:** _____ **QA: N/C Closed:** _____ **Date:** _____

NCR:		WORK ORDER NON-CONFORMANCE (NCR)						
DATE	STEP	Description of NC Section A	Corrective Action Section B			Verification Section C	Approval Chief Eng	Approval QC Inspector
			Initial Chief Eng	Action Description Chief Eng	Sign & Date			

NOTE: Date & initial all entries

H:\fFORMS\Quality Assurance\approved QA\NCRWO RevE

Picklist Print

Tuesday, August 24, 2010 12:58:33 PM

Work Order ID: 60524

Parent Item: D212-664-201

Parent Item Name: Crosstube Aft

Start Date: 7/13/2010 **Required Date:** 7/26/2010

Start Qty: 1.00 **Required Qty:** 1.00

Comments:
IPP Rev:E□04.02.16□Reformat□K/DS
IPP Rev:F 06-03-29 Remove Coments on Pick List JLM
IPP Rev:G 07-04-30 As per Rev C JLM
IPP Rev:H 08-05-22 up date Qty of rubber cushion DD verified by:EC

Component Item ID/ Item Name	Replacement Item ID	Mfg/ Purch	Bin Item	Primary Location	Last Location	Route Seq ID	Unit of Measure	Qty on Hand	Qty per Kit	Total Qty	Qty Issued	Date Issued	Status
D212-664-201TRN Crosstube Turning Detail		Manufactured	No			110	Each	2.0000	1	1	MB - 10-08-24		
				Location			**Loc Qty**		**Loc Code**				
				FG			1						
					60714		1						
				LG			1						
					60715		1			4X			
D3595-063-530 RUBBER CUSHION		Manufactured	No			230	Each	81.0000	2	2	ml 10.09.07		
				Location			**Loc Qty**		**Loc Code**				
				FP			44						
					50030		12						
					51776		32						
				LG			37						
					59581		37						
D2940-1 Support		Manufactured	No			230	Each	43.0000	2	2	ml 10.09.07		
				Location			**Loc Qty**		**Loc Code**				
				LG			43						
					45203		1						
					47748 x1		2						
					57338		20						
					60271 x1		20						

Picklist Print

Tuesday, August 24, 2010 12:58:33 PM

Work Order ID: 60524

Parent Item: D212-664-201

Parent Item Name: Crosstube Aft

Start Date: 7/13/2010 **Required Date:** 7/26/2010

Start Qty: 1.00 **Required Qty:** 1.00

MS21920-28 Clamp(per MIL-DTL-8783C)	Purchased	No	230	Each	77.0000	4	4	M 10-09-07

Location	Loc Qty	Loc Code
FG	5	
105884	5	
LG	72	
112863	24	
114749	48	

6 D3428-1 Placard	Manufactured	No	250	Each	9.0000	1	1	

Location	Loc Qty	Loc Code
ST056	9	
60484	9	

6 MS21042L6 Nut	Purchased	No	250	Each	326.0000	6	6	60484

Location	Loc Qty	Loc Code
ST300	326	
111578	4	
114495	122	M114495
115300	200	

5 ~~AN960JD616~~ NAS1149D0663J Washer	Purchased	No	250	Each	0.0000	18	18	M115589 10/8/9

Picklist Print

Tuesday, August 24, 2010 12:58:33 PM

Work Order ID: 60524

Parent Item: D212-664-201

Parent Item Name: Crosstube Aft

Start Date: 7/13/2010 **Required Date:** 7/26/2010

Start Qty: 1.00 **Required Qty:** 1.00

AN6-40A Bolt	Purchased	No	250	Each	99.0000	4	4	

Location	Loc Qty	Loc Code
ST343	99	
112828	1	
114283	38	M114283
115300	60	

AN6-41A Bolt	Purchased	No	250	Each	68.0000	2	2	13/9/9

Location	Loc Qty	Loc Code
ST344	68	
113288	38	M113288
115316	30	

DART AEROSPACE LTD	Work Order:	60524
Description: Crosstube High Aft (205/212)	**Part Number:**	**D212-664-201**
Inspection Dwg: D212-664-241 **Rev:** D		**Page 1 of 1**

Required Dimension	Min	Max
Height	24.17	24.43
1/2 Span	53.59	53.85
Angle	49	52
Total Span	107.18	107.70

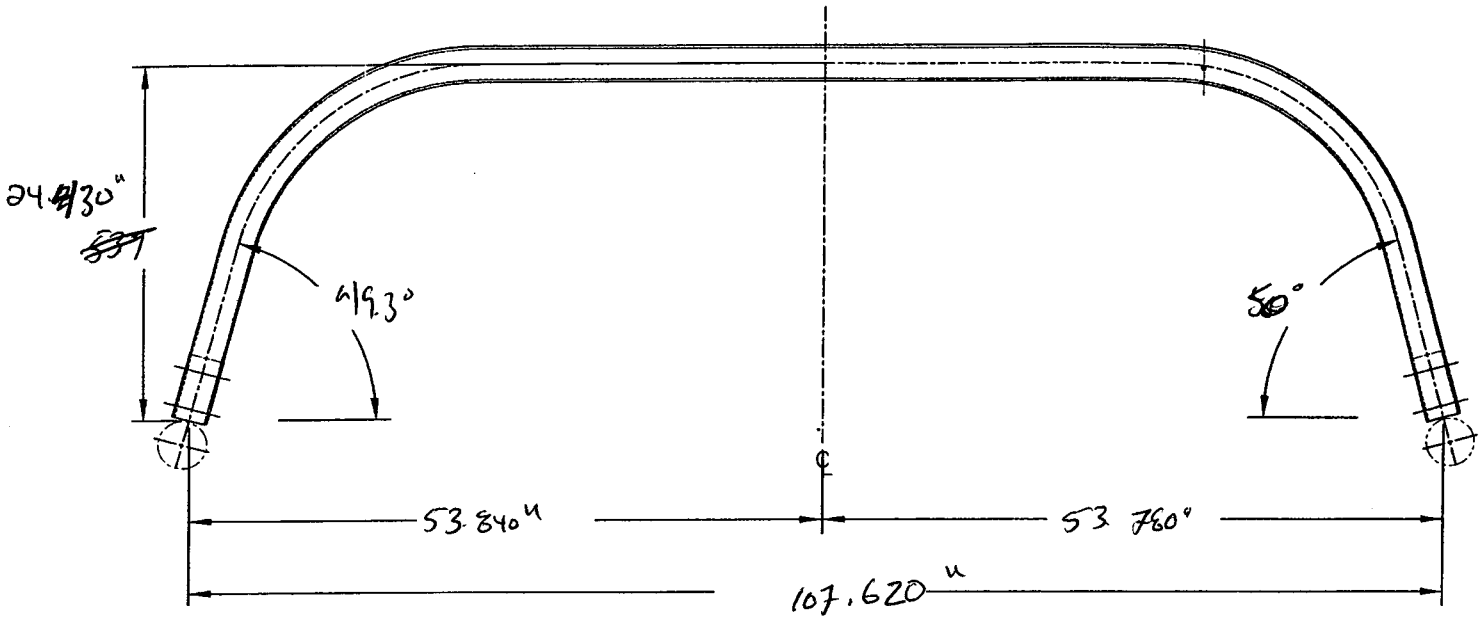

Comments

QC15 Inspection	δ
Date	10/08/25

Rev	Date	Change	Revised by	Approved
A	07.02.06	New Issue	KJ/JM	
B	07.05.08	Dimensions updated per Dwg rev. C	KJ/JLM	
C	10.04.01	Dwg Rev updated	KJ	

Item	Qty -241	Qty -241B	Part Number	Description
1	X		D212-664-241	CROSSTUBE ASSEMBLY (205/212 HIGH AFT)
2		X	D212-664-241B	CROSSTUBE ASSEMBLY (214 HIGH AFT)
3	1	1	D6006-129	CROSSTUBE
4	2	2	D2940-1	SUPPORT
5	4	4	D3595-063-530	RUBBER CUSHION
6	4	4	MS21920-28	CLAMP (OR MS21920-30)
7	A/R	A/R	MAGNOBOND 6398	ROCKWELL SPECIFICATION RBO-120-023 ADHESIVE (TEXTRON/BELL SPEC. 299-947-100, TYPE II, CLASS 2 ADHESIVE)

SHOP COPY
RETURN TO
ENGINEERING
UNCONTROLLED COPY
SUBJECT TO AMENDMENT
WITHOUT NOTICE
WORK ORDER
NO. 60524
pl 10-7-23

GENERAL NOTES:

1) MATERIAL: MANUFACTURED FROM D6006-129
   FINISHED LENGTH = 124.362±0.020
2) FINISH: CHEMICAL CONVERSION COAT PER DART QSI 005 4.1
   PRIME INSIDE AND OUTSIDE PER DART QSI 005 4.2
   PAINT OUTSIDE PER DART QSI 005 4.2
3) TOLERANCES ARE PER DART QSI 018 UNLESS OTHERWISE NOTED.
4) UNITS: INCHES UNLESS OTHERWISE NOTED.
5) BREAK SHARP EDGES: 0.005 TO 0.010 MAX.
6) IDENTIFICATION: SCRIBE DART PART NUMBER "D212-664-XXX" AND BATCH NUMBER ON INSIDE OF CUFF USING VIBRATING STYLUS.
7) WEIGHT: D212-664-241 = 44.2 lbs (PER IIN-D212-664)
   D212-664-241B = 44.2 lbs (PER IIN-D212-664)
8) PART IS SYMMETRIC ABOUT CENTERLINE.
9) RUN CUTTER OFF PART. BLEND OUT EDGE LONGITUDINALY, TRANSITION SHOULD BE SMOOTH.
10) BEND PROGRESSIVELY WITH A MINIMUM OF 5 PASSES. MAXIMUM TUBE FLATTENING DUE TO BENDING IS 6% BASED ON O.D.
11) LIQUID PENETRANT INSPECT OUTSIDE SURFACE OF CROSSTUBE PER QSI 038.
12) INSTALL D2940-1 SUPPORT USING 0.03" TO 0.06" THICK LAYER OF MAGNOBOND 6398 TO THE SURFACE OF D2940-1 THAT WILL BE IN CONTACT WITH THE CROSSTUBE PER QSI 015. LET CURE FOR 12 HOURS AFTER INSTALLATION AND PRIOR TO PACKAGING.
13) INSTALL MS21920-28 CLAMPS (OR -30) WITH D3595-063-530 RUBBER CUSHIONS TO SECURE THE D2940-1 SUPPORT ON TOP SIDE OF THE CROSSTUBE. ENSURE CLAMPS ARE OPPOSITE OF CROSSTUBE SUPPORT.
14) EXTREME CARE MUST BE TAKEN TO PROTECT THE OUTSIDE SURFACE OF THE TUBE. THE OUTSIDE SURFACE MUST BE SMOOTH AND FREE FROM SURFACE DEFECTS SUCH AS SCRATCHES, NICKS, OR DENTS. DEFECTS UP TO 0.005" MAY BE BLENDED OUT LONGITUDINALLY. CIRCUMFERENTIAL GRIND MARKS ARE UNACCEPTABLE.
15) TORQUE CLAMPS 80 TO 100 IN-LB. ENSURE AT LEAST 1.5 THREADS SHOWING IN SAFETY AND THAT NUT HAS NOT BOTTOMED-OUT AFTER TORQUING.

RELEASED
2009-10-29

REV.	DESCRIPTION	BY	DATE
D	REFORMAT/REVISE GENERAL NOTES/PART LIST; REORGANIZED VIEWS AND REFORMATTED DRAWING TO CURRENT STANDARDS; ADD -241B (ZN D4-2, B4-2); REMOVED REF & ADD TOLERANCES (ZN D8-3 & C4-3, C6-3 & A8-3); RELOCATED FLAG #6 PER PAR 08-046 (ZN A5-3); MOVED TURNING DETAIL & UPDATED TOLERANCE TO SHEET 4	RF	09.09.30
C	REMOVE -1009 ABRASION STRIP; ADD MAGNOBOND 6398, CUSHION, REVERSE CLAMPS	PH	07.03.08
B	ADD HOLES FOR COMPATABILITY WITH BHT/AA SKIDTUBES	PH	05.02.04
A	NEW ISSUE	PH	00.12.12

DESIGN	PH	DART AEROSPACE LTD HAWKESBURY, ONTARIO, CANADA
DRAWN	RF	
CHECKED		DRAWING NO. REV. D
MFG. APPR.		D212-664-241 SHEET 1 OF 4
APPROVED		TITLE SCALE
DE APPR.		CROSSTUBE ASS'Y (205/212 HI AFT) NTS
DATE	09.09.30	

Dart Aerospace Ltd

W/O:		WORK ORDER CHANGES					
DATE	STEP	PROCEDURE CHANGE	By	Date	Qty	Approval Chief Eng / Prod Mgr	Approval QC Inspector

Part No: _____ **PAR #:** _____ **Fault Category:** _____ **NCR:** Yes No **DQA:** _____ **Date:** _____

Resolution: _____ **Disposition:** _____ **QA: N/C Closed:** _____ **Date:** _____

NCR:		WORK ORDER NON-CONFORMANCE (NCR)						
DATE	STEP	Description of NC Section A	Corrective Action Section B			Verification Section C	Approval Chief Eng	Approval QC Inspector
			Initial Chief Eng	Action Description Chief Eng	Sign & Date			

NOTE: Date & initial all entries

H:\fFORMS\Quality Assurance\approved QA\NCRWO RevE

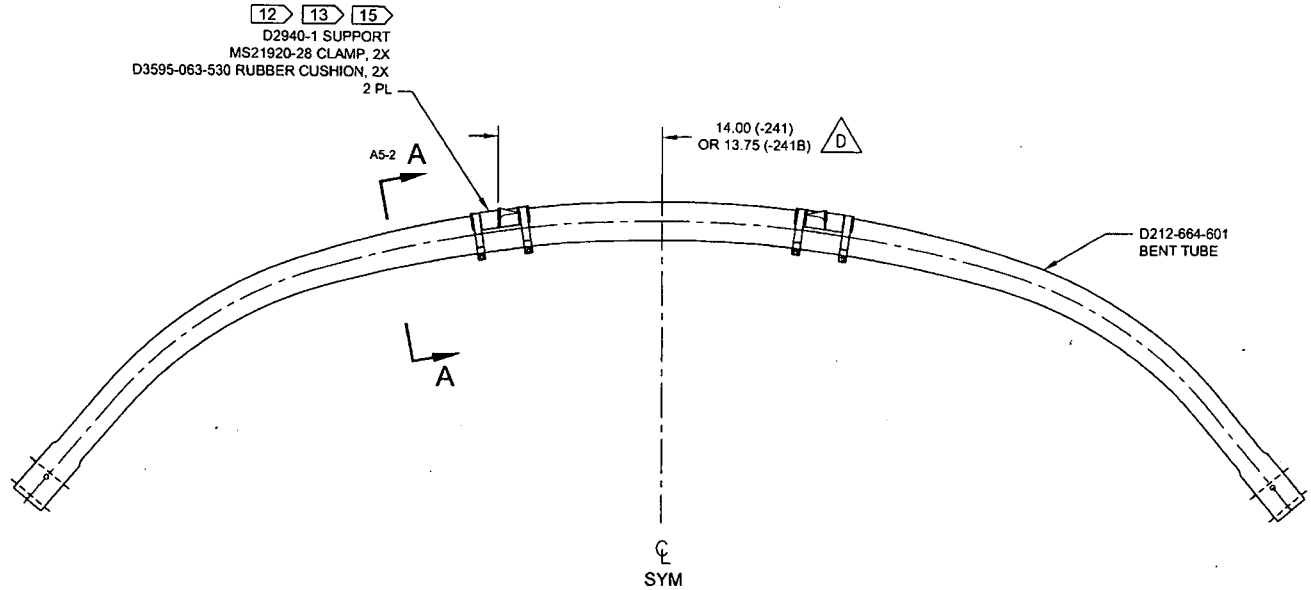

D212-664-241/-241B ASSEMBLY DETAIL D

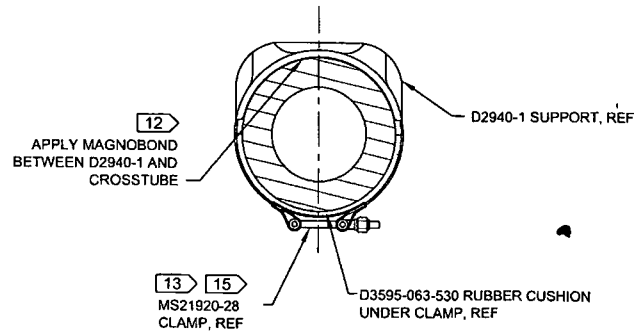

SECTION A-A D6-2
SCALE 4X

w/o 605234

RELEASED
2009 -10- 28

DESIGN	PH	**DART AEROSPACE LTD** HAWKESBURY, ONTARIO, CANADA
DRAWN	RF	
CHECKED		DRAWING NO. D212-664-241 — REV. D — SHEET 2 OF 4
MFG. APPR.		
APPROVED		TITLE: CROSSTUBE ASS'Y (205/212 HI AFT) — SCALE: NTS
DE APPR.		
DATE	09.09.30	

Dart Aerospace Ltd

W/O:		WORK ORDER CHANGES					
DATE	STEP	PROCEDURE CHANGE	By	Date	Qty	Approval Chief Eng / Prod Mgr	Approval QC Inspector

Part No: _____ PAR #: _____ Fault Category: _____ NCR: Yes No DQA: _____ Date: _____

Resolution: _____ Disposition: _____ QA: N/C Closed: _____ Date: _____

NCR:		WORK ORDER NON-CONFORMANCE (NCR)						
DATE	STEP	Description of NC Section A	Corrective Action Section B			Verification Section C	Approval Chief Eng	Approval QC Inspector
			Initial Chief Eng	Action Description Chief Eng	Sign & Date			

NOTE: Date & initial all entries

H:\fFORMS\Quality Assurance\approved QA\NCRWO RevE

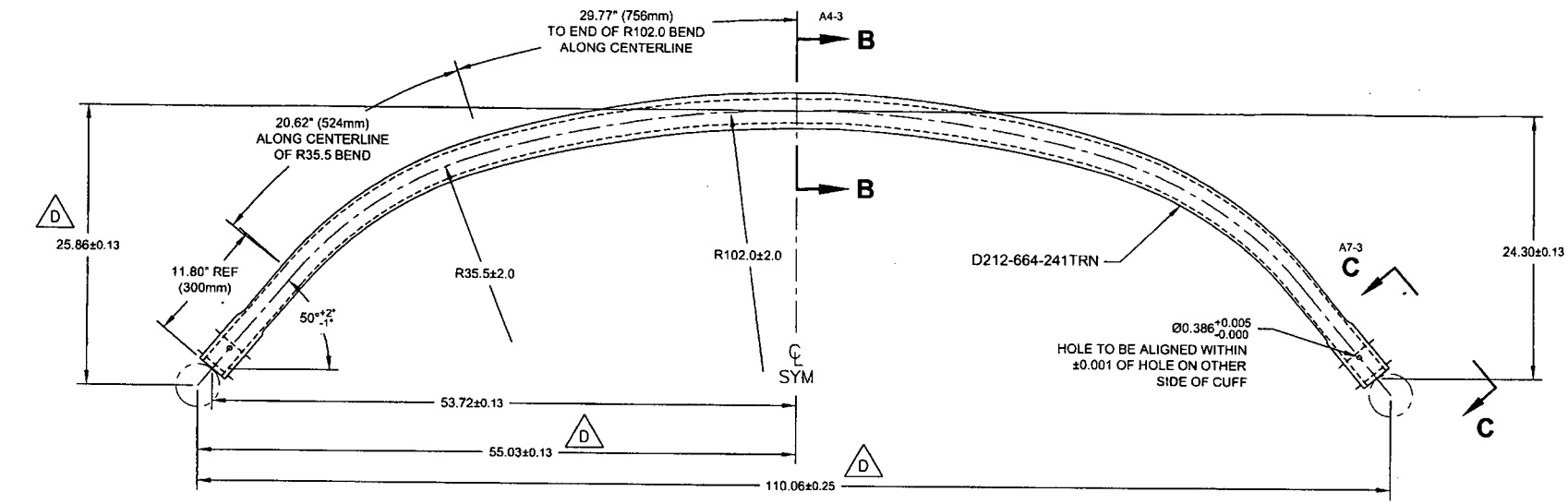

D212-664-601 10 D
BENDING AND DRILLING DETAIL

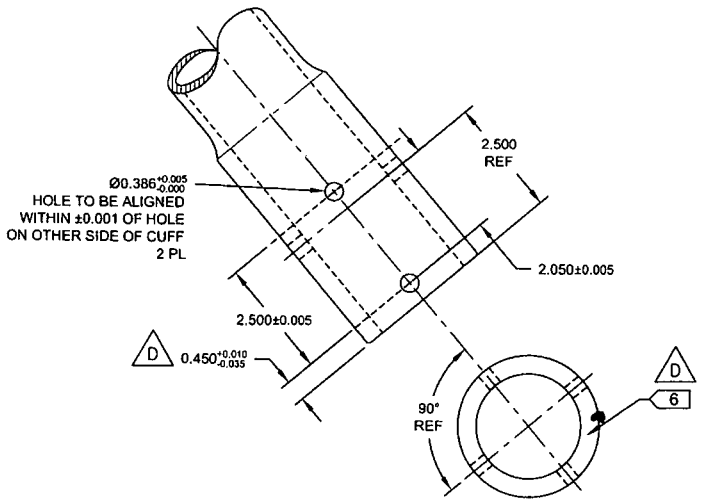

VIEW C-C: CUFF DETAIL D2-3
SCALE 3X

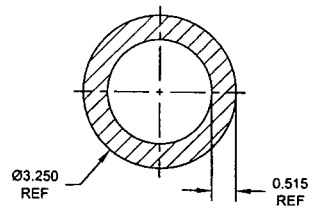

SECTION B-B D4-3
SCALE 4X

Wo 60529

RELEASED
2009 -10- 29

DESIGN		DART AEROSPACE LTD HAWKESBURY, ONTARIO, CANADA
DRAWN	RF	
CHECKED		DRAWING NO. D212-664-241 — REV. D — SHEET 3 OF 4
MFG. APPR.		
APPROVED		TITLE: CROSSTUBE ASS'Y (205/212 HI AFT) — SCALE: NTS
DE APPR.		
DATE	09.09.30	

Dart Aerospace Ltd

W/O:		WORK ORDER CHANGES					
DATE	STEP	PROCEDURE CHANGE	By	Date	Qty	Approval Chief Eng / Prod Mgr	Approval QC Inspector

Part No: _____ **PAR #:** _____ **Fault Category:** _____ **NCR:** Yes No **DQA:** _____ **Date:** _____

Resolution: _____ **Disposition:** _____ **QA: N/C Closed:** _____ **Date:** _____

NCR:		WORK ORDER NON-CONFORMANCE (NCR)						
DATE	STEP	Description of NC Section A	Corrective Action Section B			Verification Section C	Approval Chief Eng	Approval QC Inspector
			Initial Chief Eng	Action Description Chief Eng	Sign & Date			

NOTE: Date & initial all entries

H:\fFORMS\Quality Assurance\approved QA\NCRWO RevE

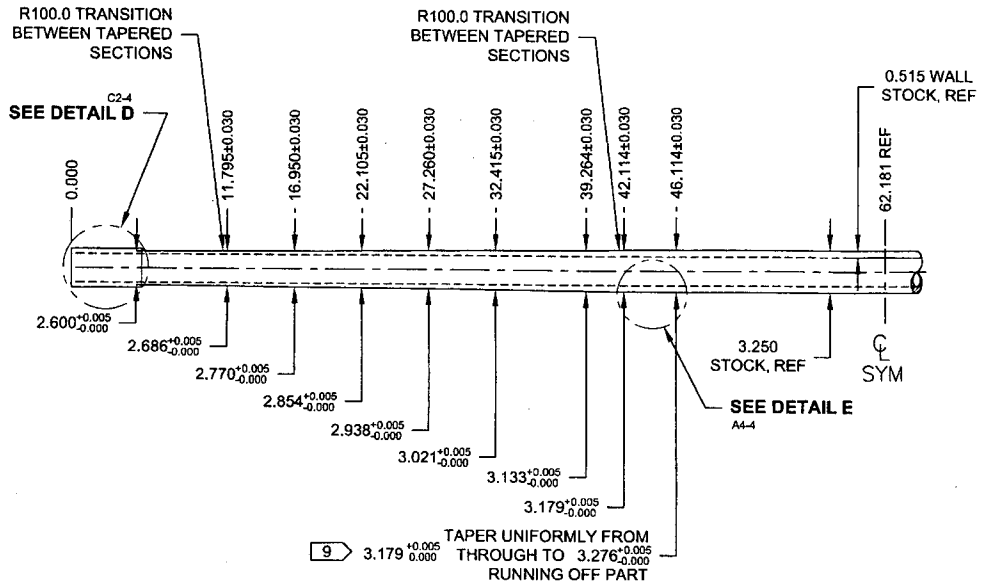

D212-664-241TRN
TURNING DETAIL

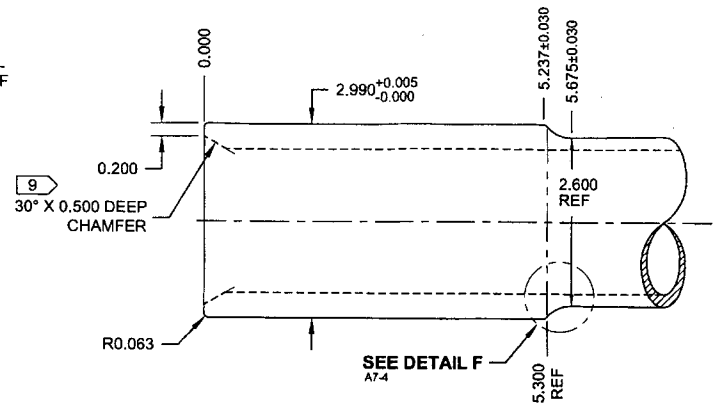

DETAIL D:
CROSSTUBE CUFF D8-4
SCALE 5X

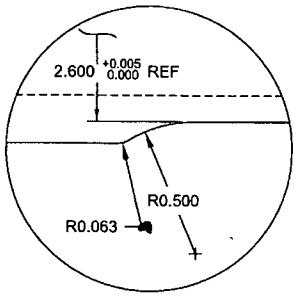

DETAIL F:
CUFF TRANSITION C2-4
SCALE 10X

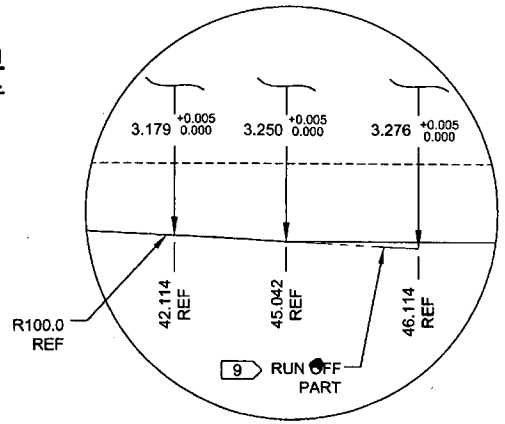

DETAIL E:
TAPER RUN-OFF C5-4
NOT TO SCALE

w/o. 600529

RELEASED
2009 -10- 29

DESIGN	PH	DART AEROSPACE LTD HAWKESBURY, ONTARIO, CANADA
DRAWN	RF	
CHECKED		DRAWING NO. D212-664-241 — REV. D — SHEET 4 OF 4
MFG. APPR.		
APPROVED		TITLE: CROSSTUBE ASS'Y (205/212 HI AFT) — SCALE: NTS
DE APPR.		
DATE	09.09.30	

Dart Aerospace Ltd

W/O:		WORK ORDER CHANGES					
DATE	STEP	PROCEDURE CHANGE	By	Date	Qty	Approval Chief Eng / Prod Mgr	Approval QC Inspector

Part No: _____ **PAR #:** _____ **Fault Category:** _____ **NCR:** Yes No **DQA:** _____ **Date:** _____

Resolution: _____ **Disposition:** _____ **QA: N/C Closed:** _____ **Date:** _____

NCR:		WORK ORDER NON-CONFORMANCE (NCR)						
DATE	STEP	Description of NC Section A	Corrective Action Section B			Verification Section C	Approval Chief Eng	Approval QC Inspector
			Initial Chief Eng	Action Description Chief Eng	Sign & Date			

NOTE: Date & initial all entries

H:\fFORMS\Quality Assurance\approved QA\NCRWO RevE

ACUREN

LIQUID PENETRANT TEST REPORT

P- 15187

PAGE 1 OF 1

CLIENT: DART AEROSPACE
DATE: AUG 27-2010 TIME: AM ☑ PM ☐
ATTENTION: LINDA / CHANTEL
ACUREN JOB NO.: 188-10-0829
ADDRESS: 1270 ABERDEEN STREET, HAWKESBURY ON. K6A 1K7
PO/WO NO.: —
WORK LOCATION: HAWKESBURY PLANT
ACCEPTANCE STD. ASTM 1417 REV./DATE 2007
PROJECT: F.P.I. ON CROSS TUBES
ITEM(S) EXAMINED: 9 PCS

JOB DESCRIPTION | PROCEDURE NO. LT-002 REV./DATE — | TECHNIQUE NO. LT-TECH2 REV./DATE —

PART NO.: —
MATERIAL: ALUMINUM ALUMINUM THICKNESS: VARIOUS
SCOPE: WET FLUORESCENT LIQUID PENETRANT INSPECTION CARRIED OUT 100% EXTERNAL.

TEST DETAILS

METHOD	☑ FLUORESCENT ☐ VISIBLE	☑ WATER WASH ☐ SOLVENT REMOVABLE ☐ POST EMULSIFIED	
FAMILY BRAND	MAGNAFLUX	BLACK LIGHT S/N 16459	☐ OUTPUT > 1000 µ W/CM² ☐ AMBIENT < 2 fc
PENETRANT	ZL 67 — MINIMUM DWELL TIME 45/10 MIN.	LIGHTING EQUIP.	☐ FLASHLIGHT ☐ TROUBLELIGHT ☐ OUTPUT>100 fc @ SURFACE
PENETRANT REMOVER	H20 — MINIMUM DRY TIME >10 MIN.	OTHER	LABINO
DEVELOPER	SKD 52 — MINIMUM DWELL TIME 10 MIN.	LIGHT METER S/N	1098866 CAL DUE DATE OCT 19 2010
DEVELOPER TYPE	☑ NON AQUEOUS ☐ AQUEOUS ☐ DRY		

TEST SURFACE

SURFACE CONDITION	☐ AS GROUND	☐ AS WELDED	☐ MACHINED	☐ SHOT BLASTED	☑ CLEAN BARE METAL
SURFACE TEMPERATURE	☐ < - 4°C/ 20°F	☐ - 4°C/ 20°F TO 10°C/50°F		☑ 10°C/50°F TO 52°C/125°F	☐ > 52°C/125°F

RESULTS- (☐ METRIC ☐ IMPERIAL)

1	-CROSS TUBE-W.O. 61038	✓
1	-CROSS TUBE-W.O. 61037	✓
1	-CROSS TUBE-W.O. 61387	✓
1	-CROSS TUBE-W.O. 61388	✓
1	-CROSS TUBE-W.O. 60523	✓
1	-CROSS TUBE-W.O. 60524	✓
1	-CROSS TUBE-W.O. 61036	✓
1	-CROSS TUBE-W.O. 61035	✓
1	-CROSS TUBE-W.O. 60573	✓

RT (10-08-3)

Scope of Services
The agreement of Acuren Group Inc. to perform services extends only to those services provided for in writing. Under no circumstances shall such services extend beyond the performance of the requested services. It is expressly understood that all descriptions, comments and expressions of opinion reflect the opinions or observations of Acuren Group Inc. based on information and assumptions supplied by the owner/operator and are not intended nor can they be construed as representations or warranties. Acuren Group Inc. is not assuming any responsibilities of the owner/operator and the owner/operator retains complete responsibility for the engineering, manufacture, repair and use decisions as a result of the data or other information provided by Acuren Group Inc. In no event shall Acuren Group Inc.'s liability in respect of the services referred to herein exceed the amount paid for such services.
Standard of Care
In performing the services provided, Acuren Group Inc. uses the degree, care and skill ordinarily exercised under similar circumstances by others performing such services in the same or similar locality. No other warranty, expressed or implied, is made or intended by Acuren Group Inc.

SIGNATURES

CLIENT REPRESENTATIVE: Ian Titley (PRINT) — (SIGNATURE)
TECHNICIAN (SIGNATURE):
NAME (PRINT): MIKE JOHNSTON
1ST TECHNICIAN — 2ND TECHNICIAN
CGSB LEVEL II SNT LEVEL ____ CGSB LEVEL ____ SNT LEVEL ____
CGSB REG. NO 6606 CGSB REG. NO ____

DTR # E27424
REPORT REVIEWED BY:
NAME INITIALS

WHITE – CLIENT COPY CANARY – OFFICE COPY PINK – TECHNICIAN COPY GOLD – OFFICE COPY